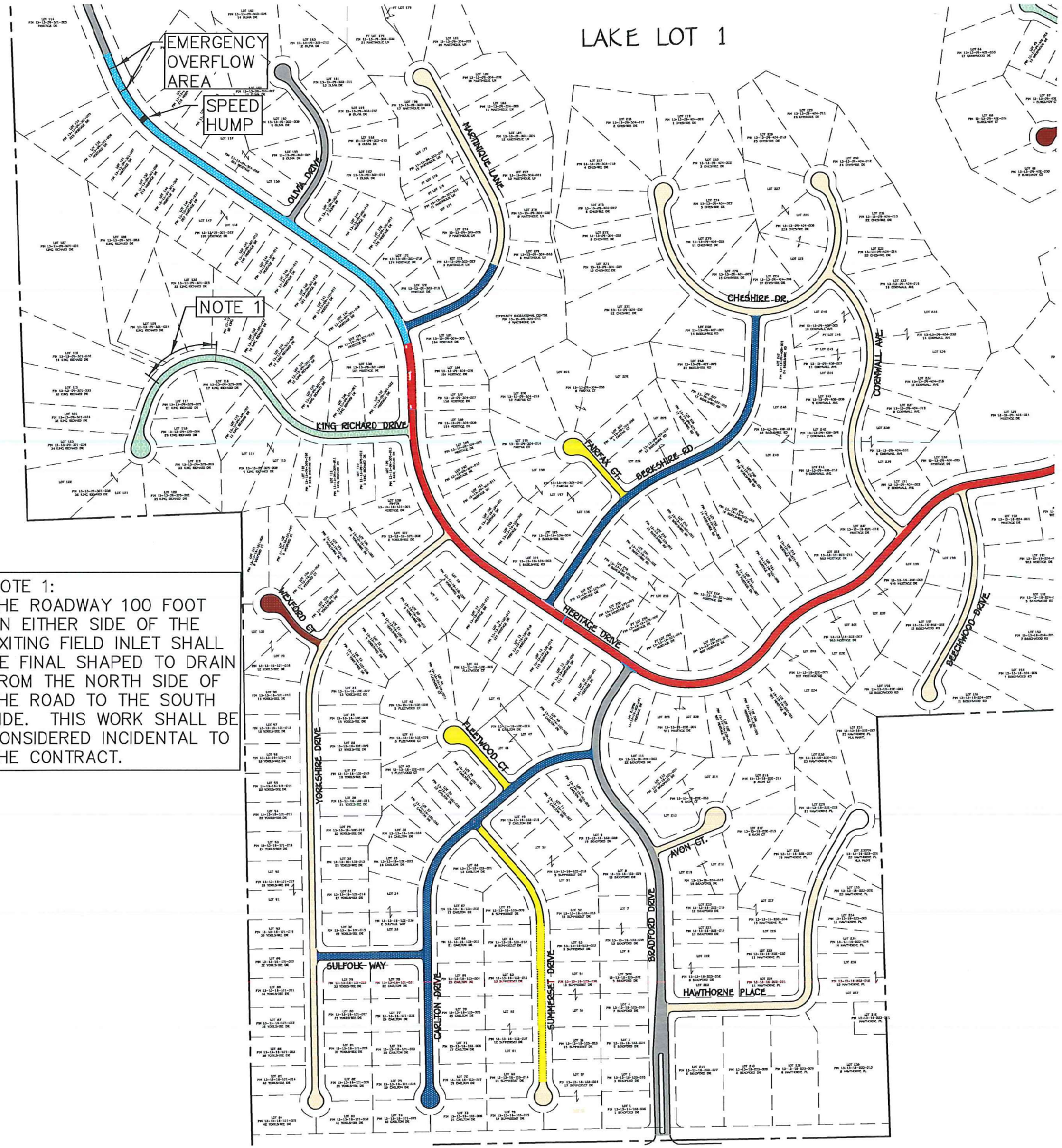

NOTE 1:
THE ROADWAY 100 FOOT ON EITHER SIDE OF THE EXITING FIELD INLET SHALL BE FINAL SHAPED TO DRAIN FROM THE NORTH SIDE OF THE ROAD TO THE SOUTH SIDE. THIS WORK SHALL BE CONSIDERED INCIDENTAL TO THE CONTRACT.

ROAD REPAIR LEGEND

- PREVIOUSLY COMPLETED
- SECONDARY RESURFACING A-1 SURFACE ONLY
- SECONDARY RESURFACING A-2 SURFACE ONLY
- SECONDARY RECONSTRUCTION 1 4" TILL WITH 4" CAM-6 ADDED SHAPE & A-3 SURFACE
- SECONDARY RECONSTRUCTION 2 4" TILL WITH 2" CAM-6 ADDED SHAPE & A-3 SURFACE
- SECONDARY RECONSTRUCTION 3 4" TILL, SHAPE AND A-3 SURFACE
- PRIMARY RECONSTRUCTION 1 6" TILL W/CEMENT ADDED PLUS 4" CAM-6, SHAPE & A-3 SURFACE
- PRIMARY RECONSTRUCTION 2 8" TILL W/CEMENT ADDED PLUS 2" CAM-6, SHAPE & A-3 SURFACE
- PRIMARY RECONSTRUCTION 3 10" TILL W/CEMENT ADDED, SHAPE & A-3 SURFACE

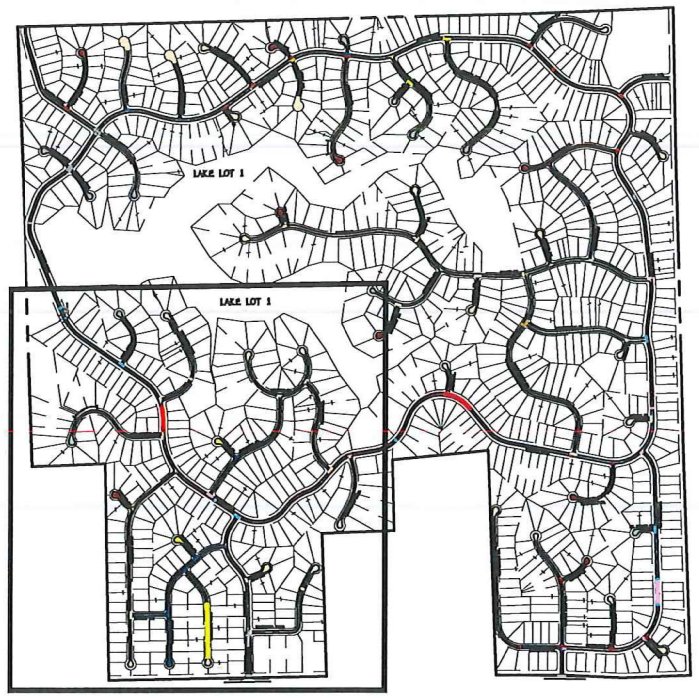

AUSTIN ENGINEERING, CO., INC.
Consulting Engineers / Surveyors
311 SW Water St., Suite 215
Peoria, Illinois 61602
License No. 184-001143

2018 ROAD IMPROVEMENTS
OVERALL LOCATION MAP
(SOUTHWEST QUADRANT)

HERITAGE LAKE ASSOCIATION
MACKINAW, IL 61755

SCALE:
N.T.S.

OVERALL LOCATION MAP SOUTHWEST QUADRANT

PROJECT NO
10-18-001

DATE
05-04-2018

SHEET
C-1

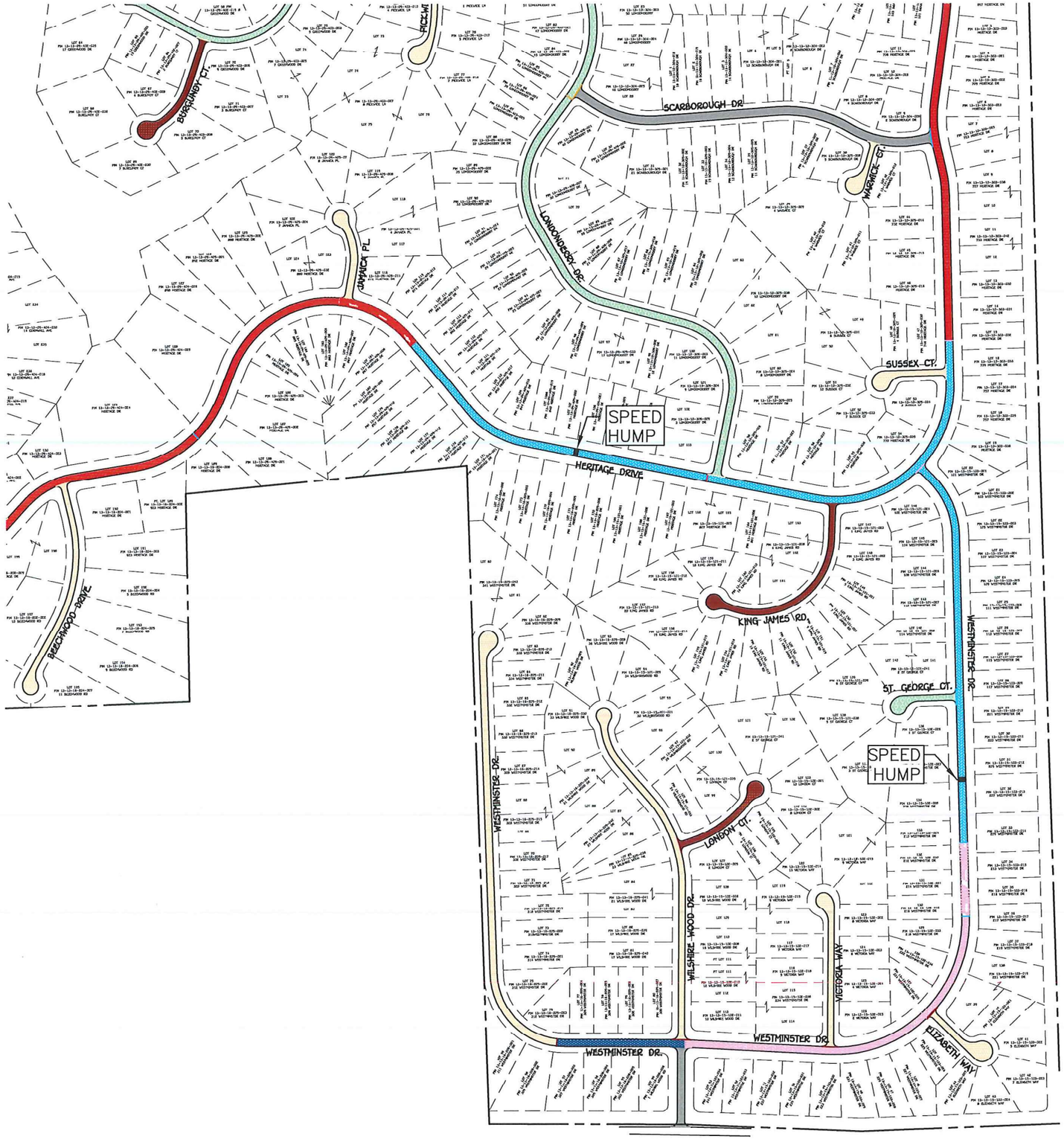

ROAD REPAIR LEGEND

- PREVIOUSLY COMPLETED
- SECONDARY RESURFACING A-1 SURFACE ONLY
- SECONDARY RESURFACING A-2 SURFACE ONLY
- SECONDARY RECONSTRUCTION 1 4" TILL WITH 4" CAM-6 ADDED SHAPE & A-3 SURFACE
- SECONDARY RECONSTRUCTION 2 4" TILL WITH 2" CAM-6 ADDED SHAPE & A-3 SURFACE
- SECONDARY RECONSTRUCTION 3 4" TILL, SHAPE AND A-3 SURFACE
- PRIMARY RECONSTRUCTION 1 6" TILL W/CEMENT ADDED PLUS 4" CAM-6, SHAPE & A-3 SURFACE
- PRIMARY RECONSTRUCTION 2 8" TILL W/CEMENT ADDED PLUS 2" CAM-6, SHAPE & A-3 SURFACE
- PRIMARY RECONSTRUCTION 3 10" TILL W/CEMENT ADDED, SHAPE & A-3 SURFACE

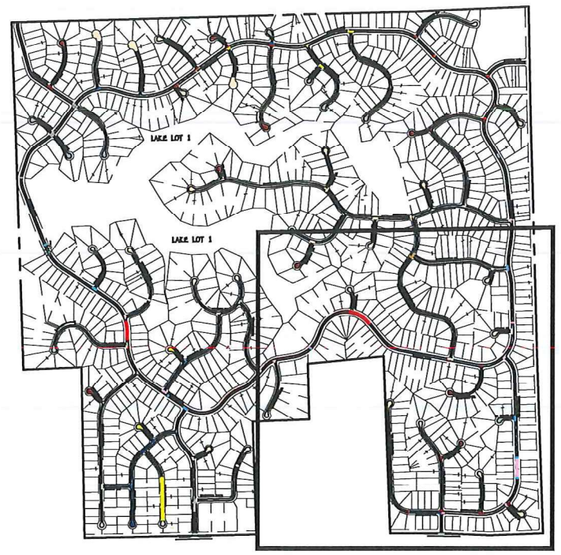

AUSTIN ENGINEERING, CO., INC.
Consulting Engineers / Surveyors
311 SW Water St., Suite 215
Peoria, Illinois 61602
License No. 184-001143

2018 ROAD IMPROVEMENTS
OVERALL LOCATION MAP
(SOUTHEAST QUADRANT)

HERITAGE LAKE ASSOCIATION
MACKINAW, IL 61755

SCALE:
N.T.S.

OVERALL LOCATION MAP SOUTHEAST QUADRANT

PROJECT NO
10-18-001

DATE
05-04-2018

SHEET
C-2

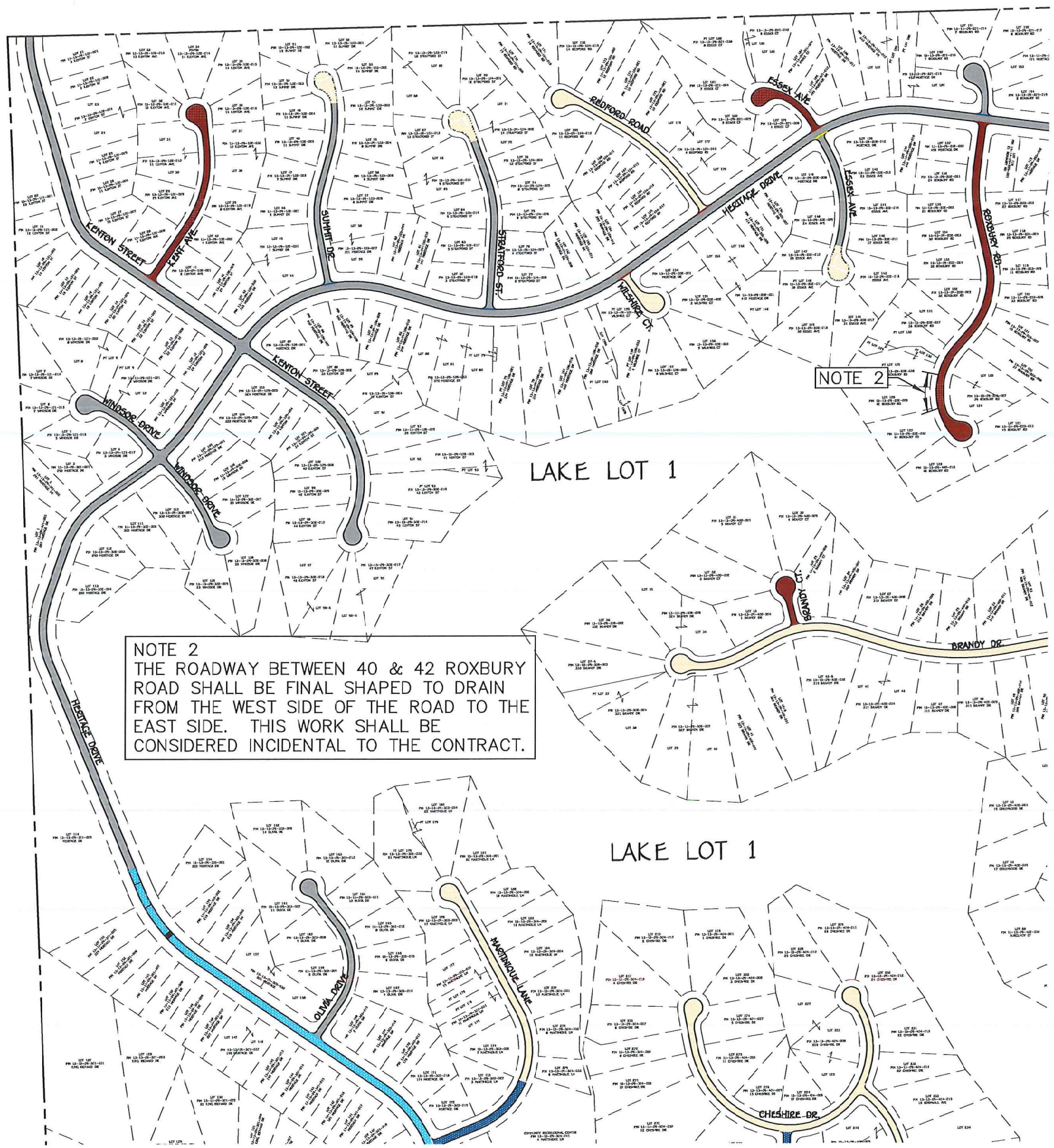

NOTE 2
THE ROADWAY BETWEEN 40 & 42 ROXBURY ROAD SHALL BE FINAL SHAPED TO DRAIN FROM THE WEST SIDE OF THE ROAD TO THE EAST SIDE. THIS WORK SHALL BE CONSIDERED INCIDENTAL TO THE CONTRACT.

ROAD REPAIR LEGEND

- PREVIOUSLY COMPLETED
- SECONDARY RESURFACING A-1 SURFACE ONLY
- SECONDARY RESURFACING A-2 SURFACE ONLY
- SECONDARY RECONSTRUCTION 1 4" TILL WITH 4" CAM-6 ADDED SHAPE & A-3 SURFACE
- SECONDARY RECONSTRUCTION 2 4" TILL WITH 2" CAM-6 ADDED SHAPE & A-3 SURFACE
- SECONDARY RECONSTRUCTION 3 4" TILL, SHAPE AND A-3 SURFACE
- PRIMARY RECONSTRUCTION 1 6" TILL W/CEMENT ADDED PLUS 4" CAM-6, SHAPE & A-3 SURFACE
- PRIMARY RECONSTRUCTION 2 8" TILL W/CEMENT ADDED PLUS 2" CAM-6, SHAPE & A-3 SURFACE
- PRIMARY RECONSTRUCTION 3 10" TILL W/CEMENT ADDED, SHAPE & A-3 SURFACE

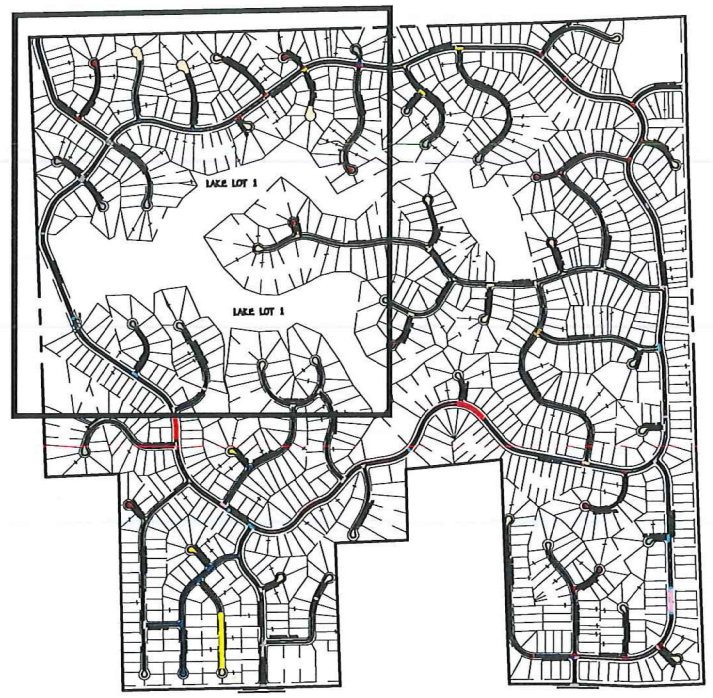

AUSTIN ENGINEERING, CO., INC.
Consulting Engineers / Surveyors
311 SW Water St., Suite 215
Peoria, Illinois 61602
License No. 184-001143

2018 ROAD IMPROVEMENTS
OVERALL LOCATION MAP
(NORTHWEST QUADRANT)

HERITAGE LAKE ASSOCIATION

MACKINAW, IL 61755

SCALE:
N.T.S.

OVERALL LOCATION MAP NORTHWEST QUADRANT

PROJECT NO
10-18-001

DATE
05-04-2018

SHEET
C-3

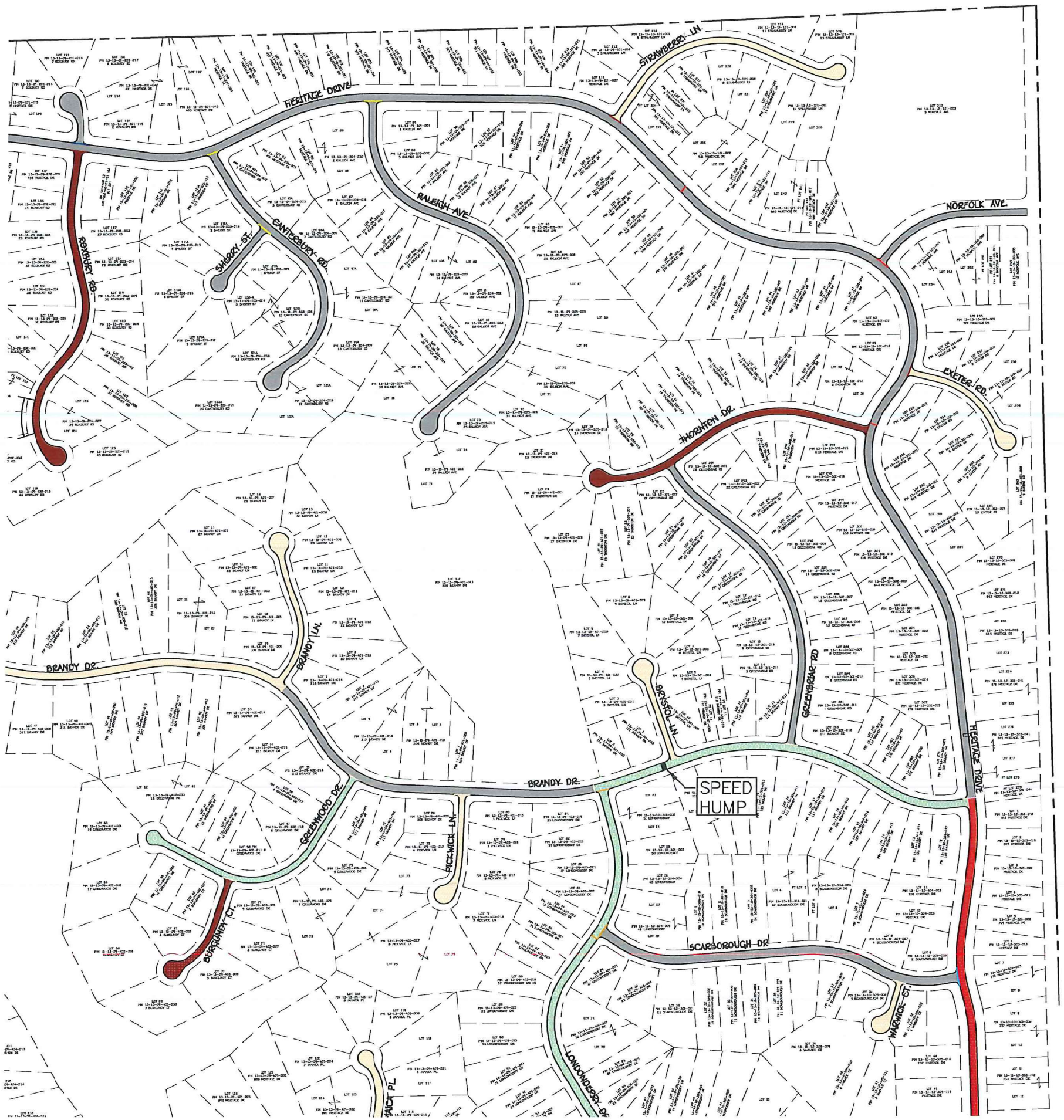

ROAD REPAIR LEGEND

- PREVIOUSLY COMPLETED
- SECONDARY RESURFACING A-1 SURFACE ONLY
- SECONDARY RESURFACING A-2 SURFACE ONLY
- SECONDARY RECONSTRUCTION 1 4" TILL WITH 4" CAM-6 ADDED SHAPE & A-3 SURFACE
- SECONDARY RECONSTRUCTION 2 4" TILL WITH 2" CAM-6 ADDED SHAPE & A-3 SURFACE
- SECONDARY RECONSTRUCTION 3 4" TILL, SHAPE AND A-3 SURFACE
- PRIMARY RECONSTRUCTION 1 6" TILL W/CEMENT ADDED PLUS 4" CAM-6, SHAPE & A-3 SURFACE
- PRIMARY RECONSTRUCTION 2 8" TILL W/CEMENT ADDED PLUS 2" CAM-6, SHAPE & A-3 SURFACE
- PRIMARY RECONSTRUCTION 3 10" TILL W/CEMENT ADDED, SHAPE & A-3 SURFACE

AUSTIN ENGINEERING, CO., INC.
Consulting Engineers / Surveyors
311 SW Water St., Suite 215
Peoria, Illinois 61602
License No. 184-001143

2018 ROAD IMPROVEMENTS
OVERALL LOCATION MAP
(NORTHEAST QUADRANT)

HERITAGE LAKE ASSOCIATION

MACKINAW, IL 61755

SCALE:
N.T.S.

OVERALL LOCATION MAP NORTHEAST QUADRANT

PROJECT NO
10-18-001

DATE
05-04-2018

SHEET
C-4

LEGEND

1. EXISTING BITUMINOUS PAVEMENT
2. EXISTING SAND & GRAVEL BASE
3. BITUMINOUS SURFACE TREATMENT, CLASS A–1
4. BITUMINOUS SURFACE TREATMENT, CLASS A–2
5. BITUMINOUS SURFACE TREATMENT, CLASS A–3
6. 4" PULVERIZATION
7. REMAINING EXISTING AGGREGATE BASE (2"MINIMUM)
8. AGGREGATE BASE COURSE (CAM–6), 2"
9. AGGREGATE BASE COURSE (CAM–6), 4"
10. 6" PULVERIZATION WITH CEMENT
11. 8" PULVERIZATION WITH CEMENT
12. 10" PULVERIZATION WITH CEMENT

APPLICATION RATES:

BITUMINOUS MATERIALS (PRIME COAT MC–30 or pep) – 0.30 GAL/S.Y.
BITUMINOUS MATERIALS (COVER COAT PG 52–28) – 0.33 GAL/S.Y.
BITUMINOUS MATERIALS (SEAL COAT CRSP) – 0.45 GAL/S.Y.
COVER COAT AGGREGATE (CA–14) – 25 LB/S.Y.
SEAL COAT AGGREGATE (CA–16CRUSHED BLACK ROCK) – 25 LB/S.Y.

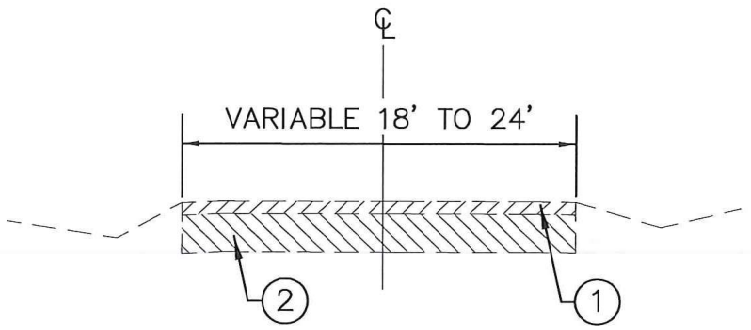

EXISTING TYPICAL SECTION

(1) VARIABLE 0.50" TO 6.00"
(2) VARIABLE 1.00" TO 9.00"

** THE PER TON PAY ITEM "AGGREGATE BASE COURSE – CAM–6, VARIABLE DEPTH" IS INCLUDED IN THE SUMMARY OF QUANTITIES TO BE USED FOR SHOULDERS AND WHERE ADDITIONAL MATERIAL IS NECESSARY TO OBTAIN THE THREE (3) PERCENT CROSS SLOPE.

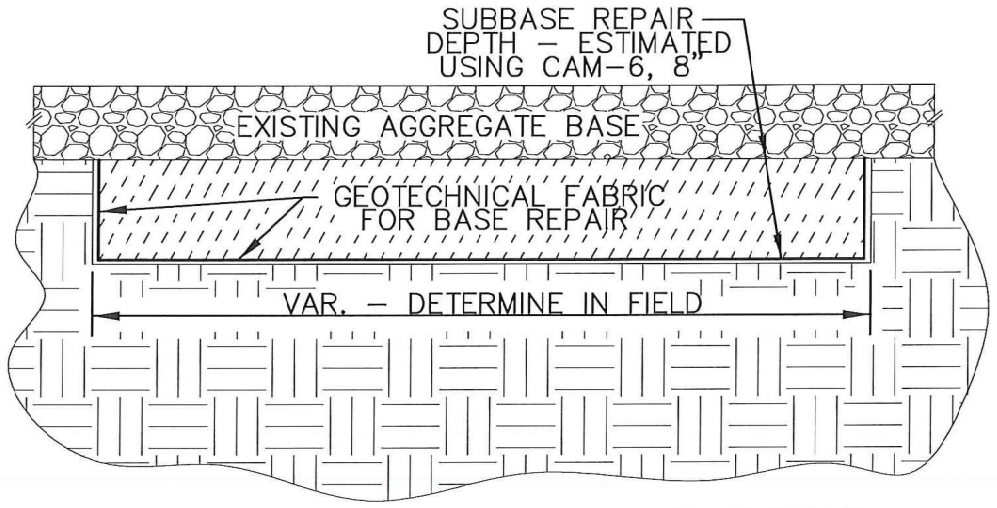

THE ACTUAL LENGTH, WIDTH AND DEPTH OF REPAIR AREA TO BE DETERMINED IN THE FIELD.

GEOTECHNICAL FABRIC FOR BASE REPAIR TO BE PLACED ON BOTTOM, ENDS & SIDES OF THE REPAIR AREA.

SUB-BASE REPAIR DETAILS

SECONDARY ROAD RESURFACING A-1

BITUMINOUS SURFACE TREATMENT, CLASS A–1

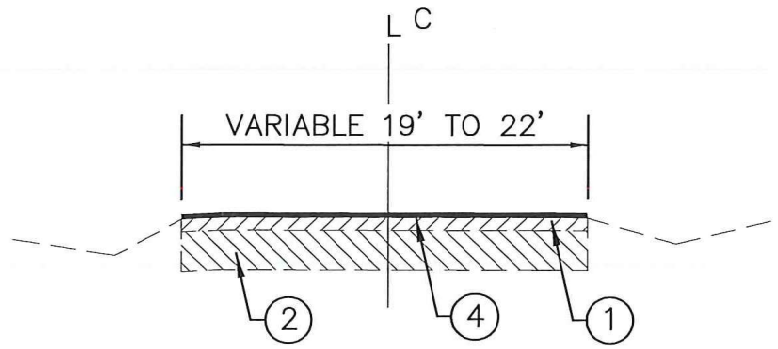

SECONDARY ROAD RESURFACING A-2

BITUMINOUS SURFACE TREATMENT, CLASS A–2

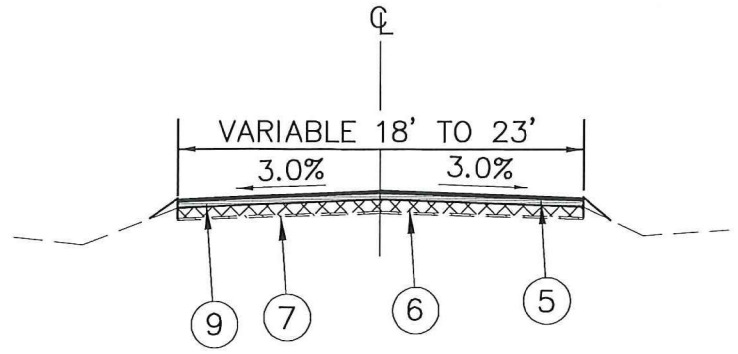

SECONDARY ROAD RECONSTRUCTION-TYPE 1

4" PULVERIZATION
AGGREGATE BASE COURSE (CAM–6), 4"
FINAL SHAPE BASE **
BITUMINOUS SURFACE TREATMENT, CLASS A–3

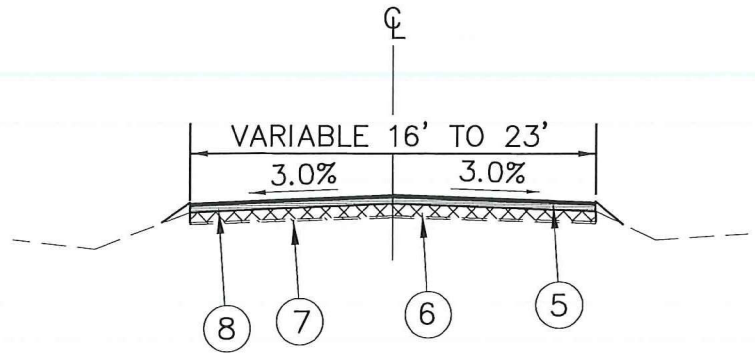

SECONDARY ROAD RECONSTRUCTION-TYPE 2

4" PULVERIZATION
AGGREGATE BASE COURSE (CAM–6), 2"
FINAL SHAPE BASE **
BITUMINOUS SURFACE TREATMENT, CLASS A–3

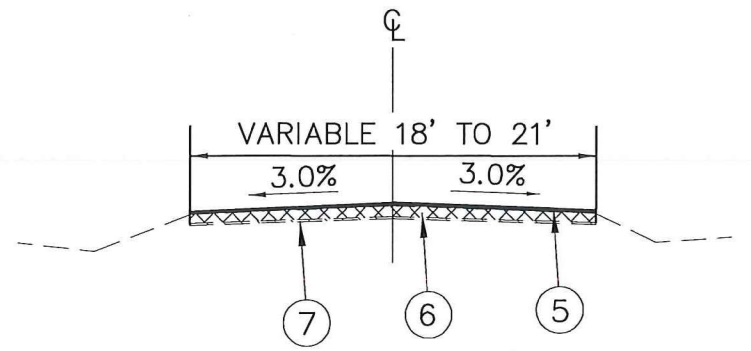

SECONDARY ROAD RECONSTRUCTION-TYPE 3

4" PULVERIZATION
FINAL SHAPE BASE **
BITUMINOUS SURFACE TREATMENT, CLASS A–3

AUSTIN ENGINEERING, CO., INC.
Consulting Engineers / Surveyors
311 SW Water St., Suite 215
Peoria, Illinois 61602
License No. 184-001143

2018 ROAD IMPROVEMENTS
SECONDARY ROADS
TYPICAL SECTIONS

HERITAGE LAKE ASSOCIIATION
MACKINAW, IL 61755

SCALE:
N.T.S.

SECONDARY ROADS TYPICAL SECTIONS

PROJECT NO
10–18–001
DATE
05–04–2018

SHEET
C–5

LEGEND

1. EXISTING BITUMINOUS PAVEMENT
2. EXISTING SAND & GRAVEL BASE
3. BITUMINOUS SURFACE TREATMENT, CLASS A–1
4. BITUMINOUS SURFACE TREATMENT, CLASS A–2
5. BITUMINOUS SURFACE TREATMENT, CLASS A–3
6. 4" PULVERIZATION
7. REMAINING EXISTING AGGREGATE BASE (2"MINIMUM)
8. AGGREGATE BASE COURSE (CAM–6), 2"
9. AGGREGATE BASE COURSE (CAM–6), 4"
10. 6" PULVERIZATION WITH CEMENT
11. 8" PULVERIZATION WITH CEMENT
12. 10" PULVERIZATION WITH CEMENT

APPLICATION RATES:

BITUMINOUS MATERIALS (PRIME COAT MC–30 OR PEP) – 0.30 GAL/S.Y.
BITUMINOUS MATERIALS (COVER COAT PG 52–28) – 0.33 GAL/S.Y.
BITUMINOUS MATERIALS (SEAL COAT CRSP) – 0.45 GAL/S.Y.
COVER COAT AGGREGATE (CA–14) – 25 LB/S.Y.
SEAL COAT AGGREGATE (CA–16 CRUSHED BLACK ROCK) – 25 LB/S.Y.

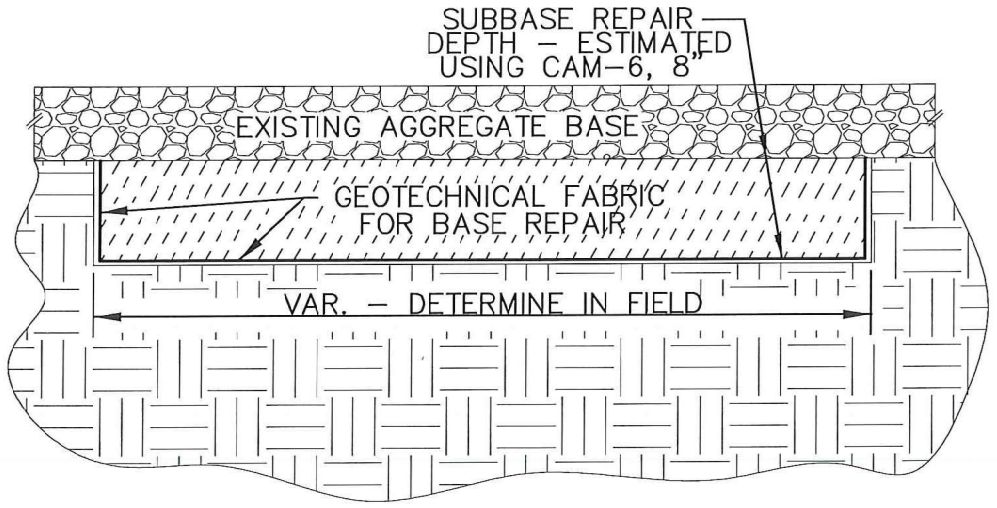

THE ACTUAL LENGTH, WIDTH AND DEPTH OF REPAIR AREA TO BE DETERMINED IN THE FIELD.

GEOTECHNICAL FABRIC FOR BASE REPAIR TO BE PLACED ON BOTTOM, ENDS & SIDES OF THE REPAIR AREA.

SUB-BASE REPAIR DETAILS

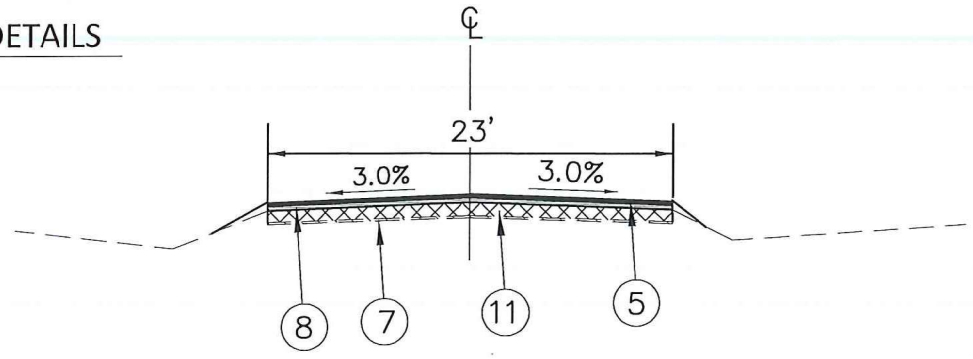

PRIMARY ROAD RECONSTRUCTION-TYPE 2

8" PULVERIZATION WITH CEMENT
AGGREGATE BASE COURSE (CAM–6), 2"
FINAL SHAPE BASE **
BITUMINOUS SURFACE TREATMENT, CLASS A–3

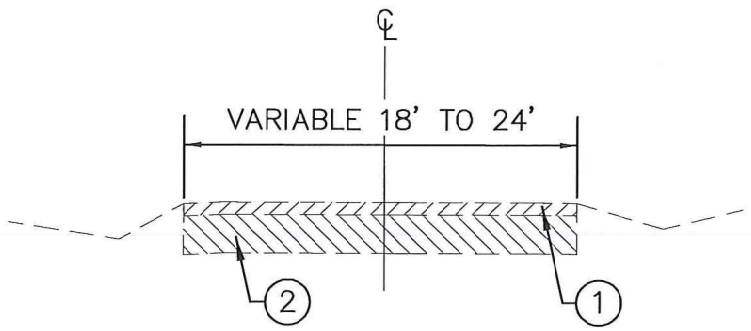

EXISTING TYPICAL SECTION

1. VARIABLE 0.50" TO 6.00"
2. VARIABLE 1.00" TO 9.00"

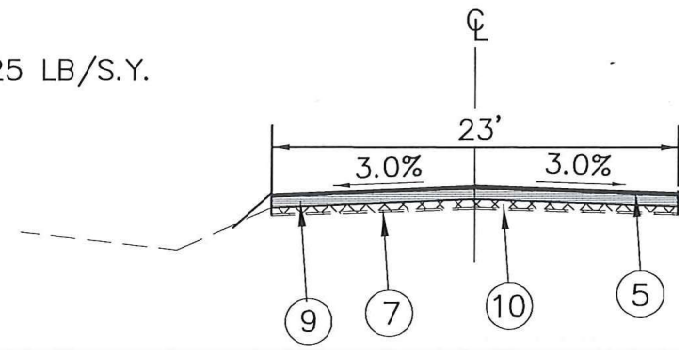

PRIMARY ROAD RECONSTRUCTION-TYPE 1

6" PULVERIZATION WITH CEMENT
AGGREGATE BASE COURSE (CAM–6), 4"
FINAL SHAPE BASE **
BITUMINOUS SURFACE TREATMENT, CLASS A–3

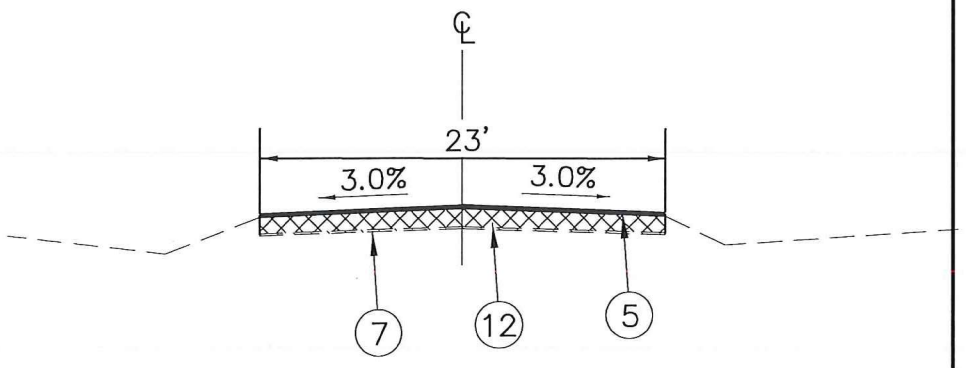

PRIMARY ROAD RECONSTRUCTION-TYPE 3

10" PULVERIZATION WITH CEMENT
FINAL SHAPE BASE **
BITUMINOUS SURFACE TREATMENT, CLASS A–3

** THE PER TON PAY ITEM "AGGREGATE BASE COURSE – CAM–6, VARIABLE DEPTH" IS INCLUDED IN THE SUMMARY OF QUANTITIES TO BE USED FOR SHOULDERS AND WHERE ADDITIONAL MATERIAL IS NECESSARY TO OBTAIN THE THREE (3) PERCENT CROSS SLOPE.

AUSTIN ENGINEERING, CO., INC.
Consulting Engineers / Surveyors
311 SW Water St., Suite 215
Peoria, Illinois 61602
License No. 184-001143

2018 ROAD IMPROVEMENTS
PRIMARY ROADS
TYPICAL SECTIONS

HERITAGE LAKE ASSOCIATION

MACKINAW, IL 61755

SCALE:
N.T.S.

PRIMARY ROADS TYPICAL SECTIONS

PROJECT NO
10–18–001
DATE
05–04–2018

SHEET
C–6

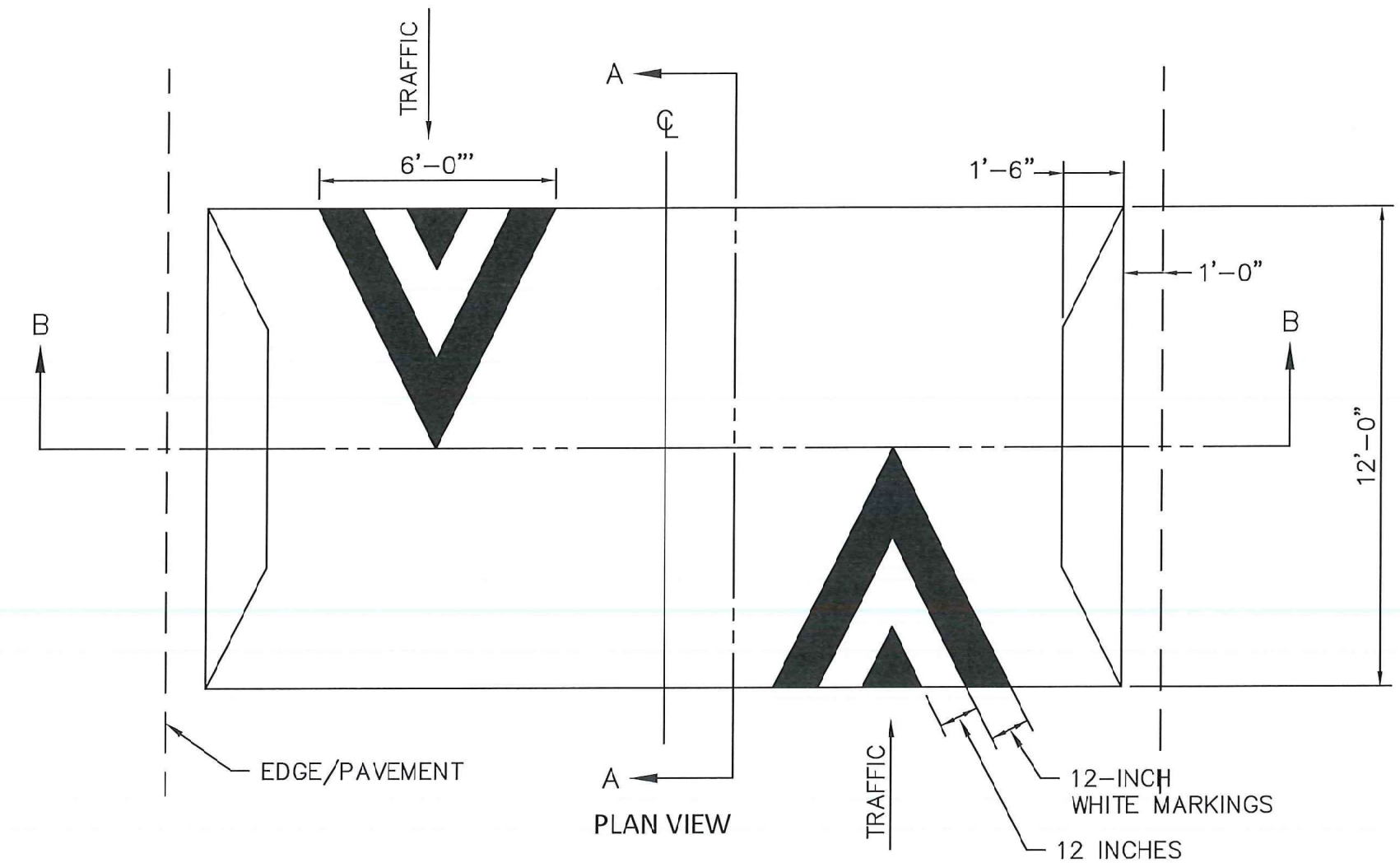

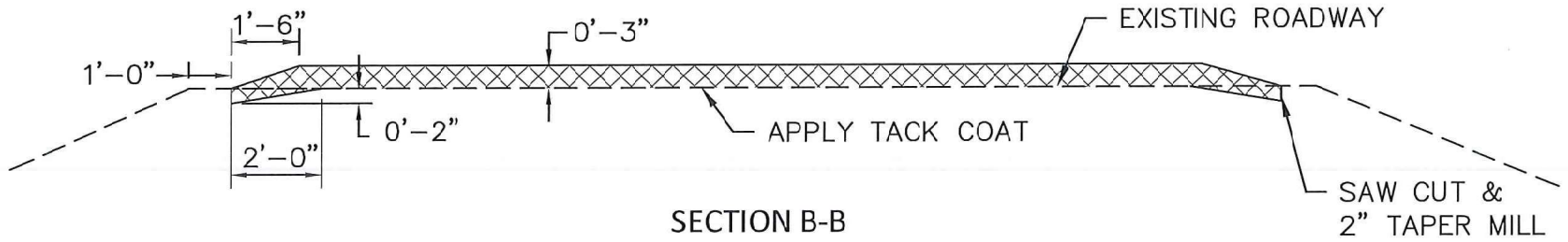

SECTION B-B

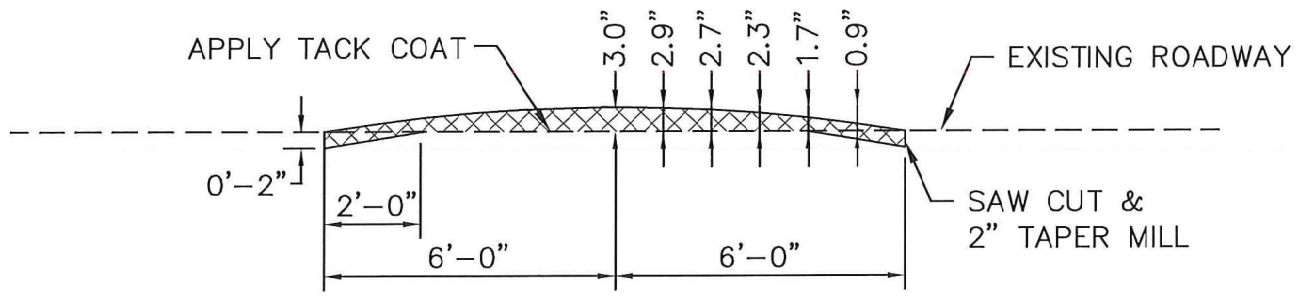

SECTION A-A

AUSTIN ENGINEERING, CO., INC.
Consulting Engineers / Surveyors
311 SW Water St., Suite 215
Peoria, Illinois 61602
License No. 184-001143

2018 ROAD IMPROVEMENTS
SPEED HUMP DETAIL

HERITAGE LAKE ASSOCIATION

MACKINAW, IL 61755

SCALE:
N.T.S.

SPEED HUMP DETAIL

PROJECT NO
10–18–001
DATE
05–04–2018

SHEET
C–7

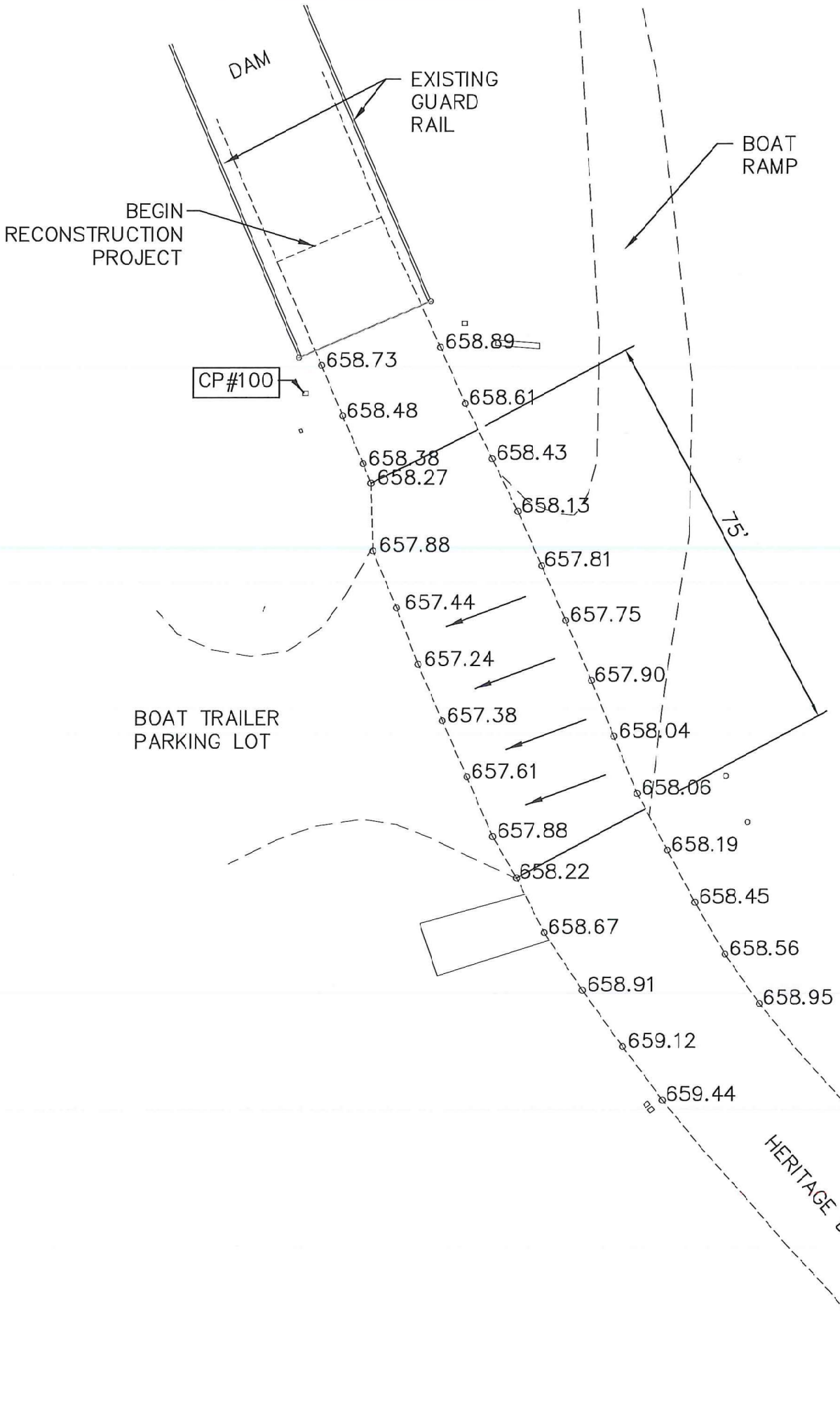

CP#100
CHISELED "X" IN CONCRETE PAD
N=1413955.9469
E=2526138.1213
ELEV. = 659.29

CP#101
CHISELED "X" IN BLACKTOP
N=1413771.6115
E=2526287.8646
ELEV. = 663.68

GENERAL NOTE:

THE 75' AREA SHOWN ON THE DRAWING ACTS AS AN EMERGENCY OVERFLOW PATH FOR THE HERITAGE LAKE DAM. THE CURRENT ELEVATIONS SHOWN IN THIS AREA MUST BE MAINTAINED DURING THE RESURFACING PROJECT.

THE THREE PERCENT CROWN WILL BE REMOVED FROM THIS AREA TO ALLOW DRAINAGE TO FLOW FROM THE EAST SIDE TO THE WEST SIDE.

AUSTIN ENGINEERING, CO., INC.
Consulting Engineers / Surveyors
311 SW Water St., Suite 215
Peoria, Illinois 61602
License No. 184-001143

2018 ROAD IMPROVEMENTS
EMERGENCY OVERFLOW DETAIL

HERITAGE LAKE ASSOCIATION

MACKINAW, IL 61755

SCALE:
N.T.S.

EMERGENCY OVERFLOW DETAIL

PROJECT NO
10-18-001
DATE
05-04-2018

SHEET
C-8